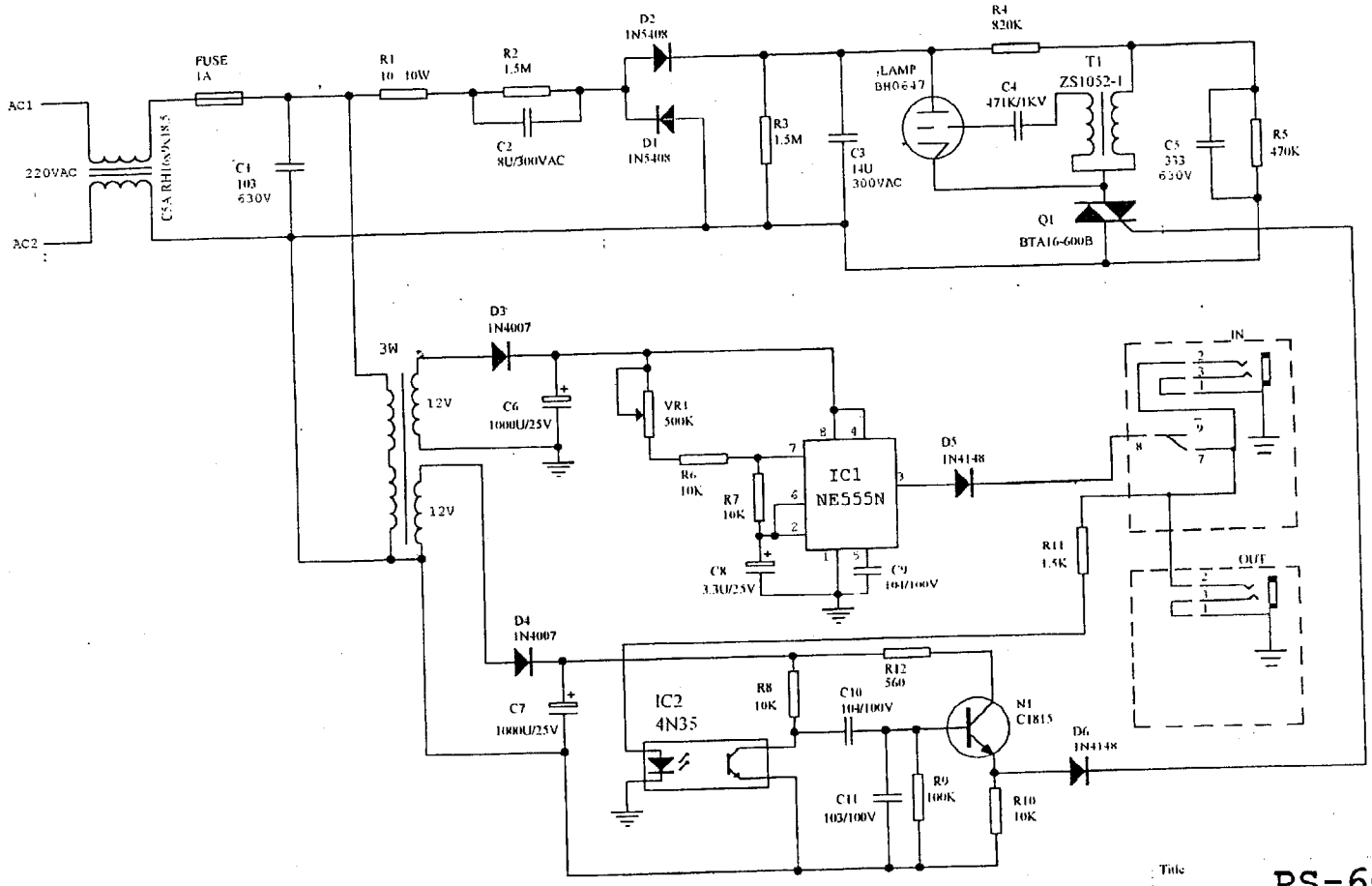

Title	PS-6C		
Size: A4	Number		Revision: B
Date: 18-Oct-2000		Sheet of	
File: C:\pcenlight\[illegible]\PS-6C.Ps-6c.sch		Drawn By:	